External dimension diagram

HDRIR-G02

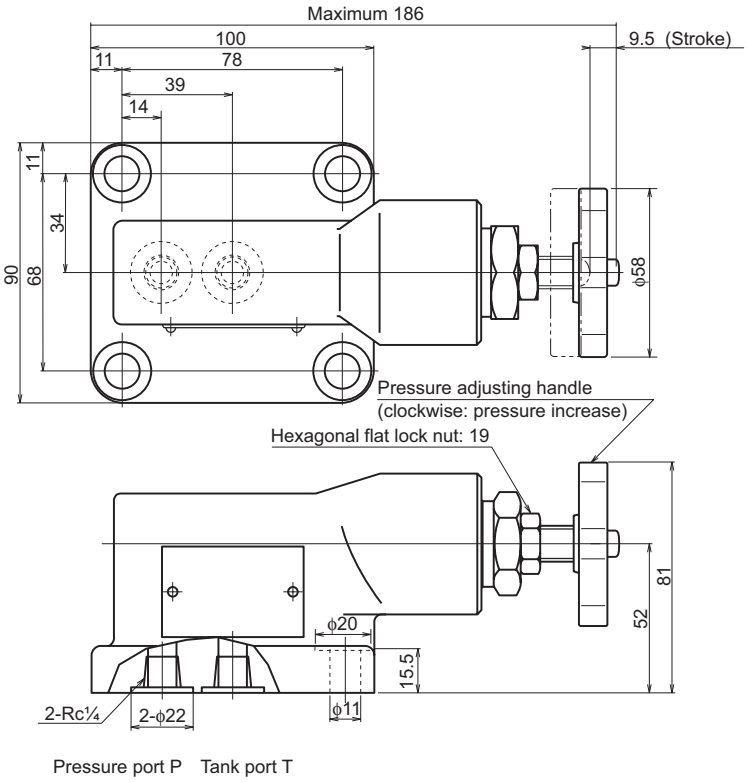

HDRIR-T02

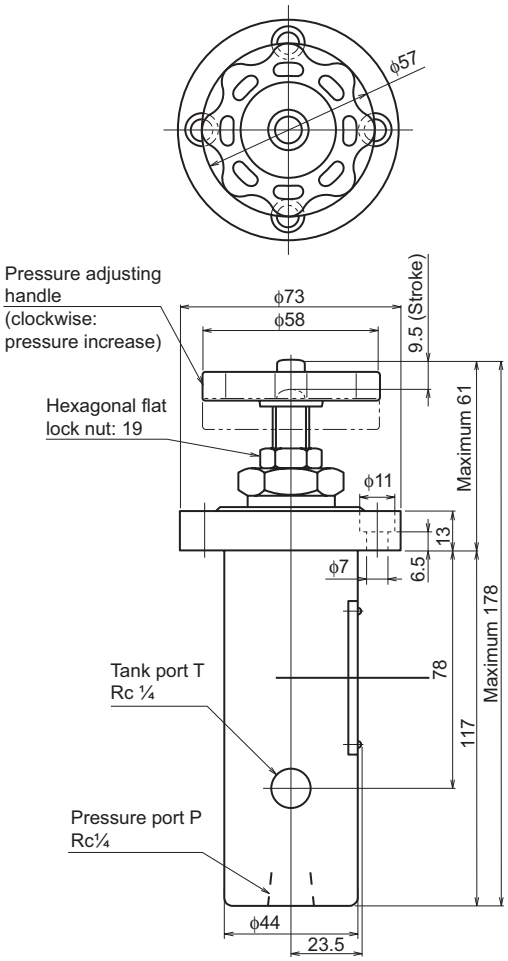

Sectional structural diagram

HDRIR-G02

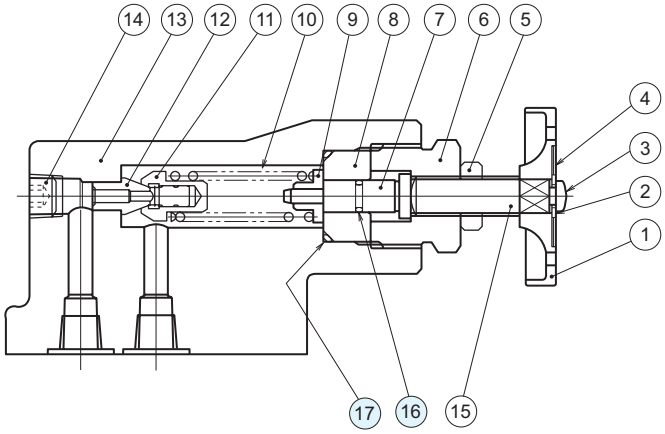

Sealing part table

Part No.	Name	Quantity	Part specifications	
			HDRIR-G02	HDRIR-T02
16	O-ring	1	JIS B 2401 1AP7	JIS B 2401 1AP7
17	O-ring	1	JIS B 2401 1AG25	JIS B 2401 1AG25